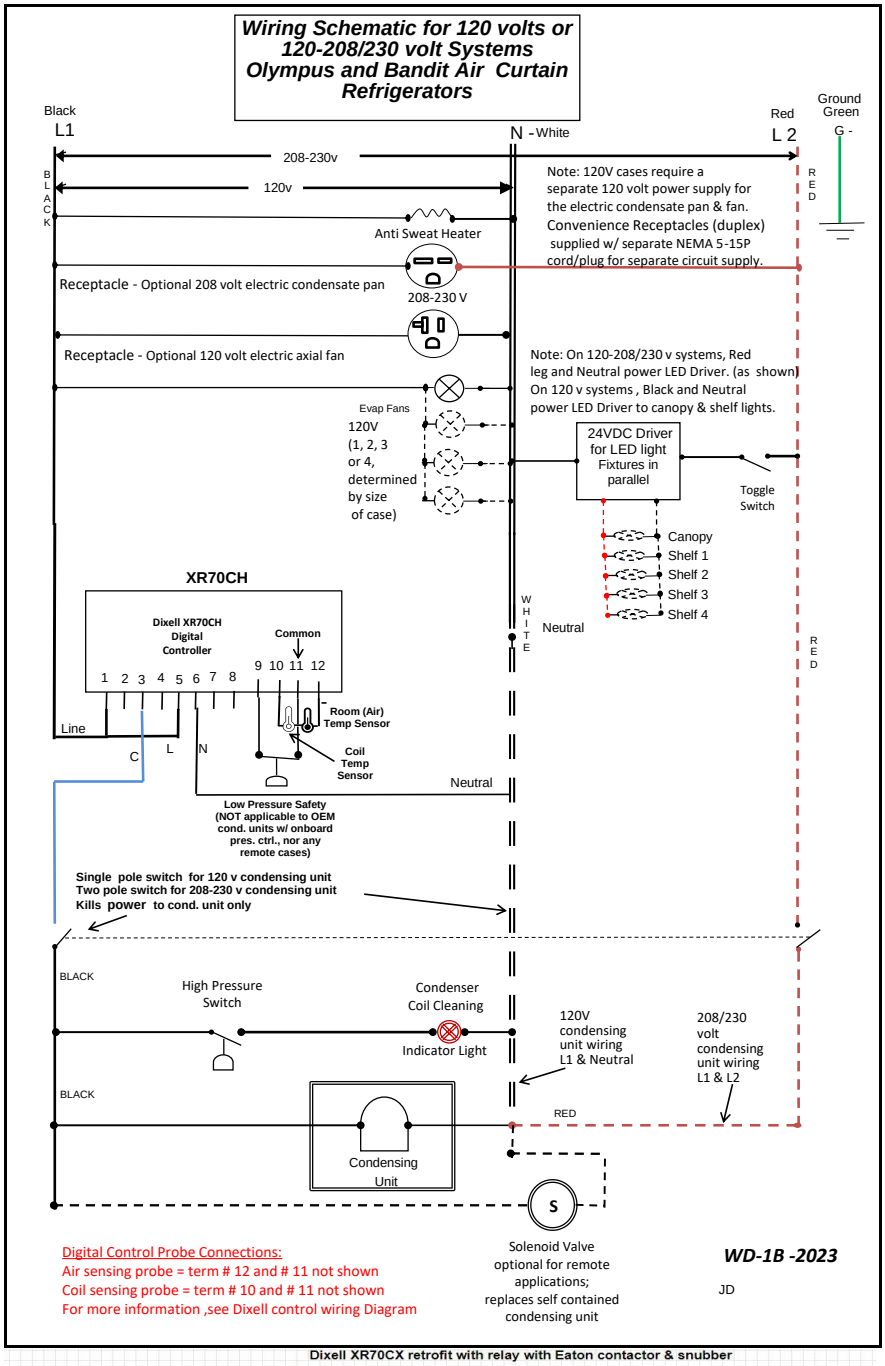

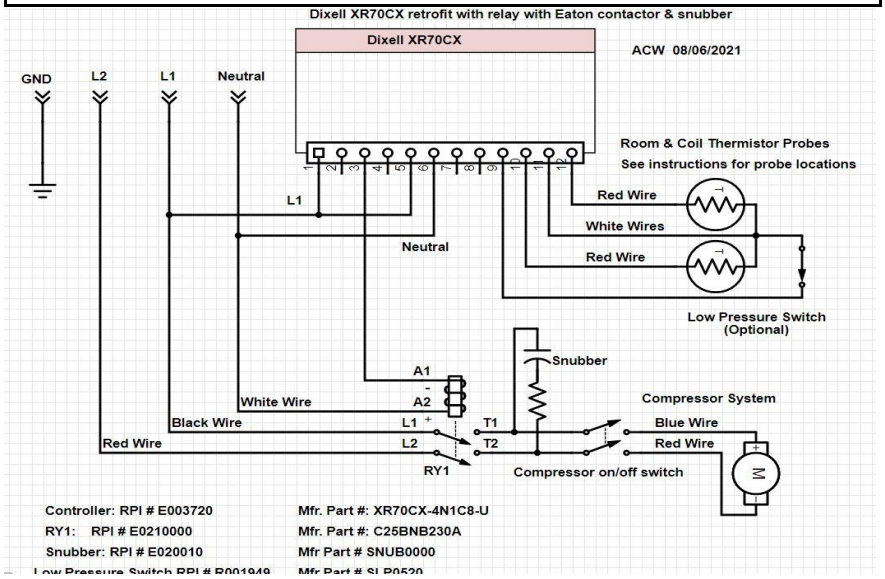

(wiring term. (3 Comp.) (1 Line),
(5 **line** Jumper from 1) (6 Neutral)
Two temperature probes
See Note Below